FORMAT FD : 07-Q R4

DRGNO	MATERIAL	SPECIFICATION	PROJECTION	GENERAL TOLERANCE ON DIMENSIONS	MACHINED SURFACES SHOWN BY	CONTROL CHARACTERSTICS	IF IN DOUBT, ASK ALL DIMENSIONS ARE IN mm UNLESS OTHERWISE SPECIFIED
BKF274				1 PLACE DECIMAL ± 0.25 ANGLE ± 0.30° 2 PLACE DECIMAL ± 0.13	ROUGH FINISH, SMOOTH FINISH, GROUND FINISH	MANDATORY MEASUREMENT, FIT/FUNCTION SPC, SAFETY CHARACTERISTIC	

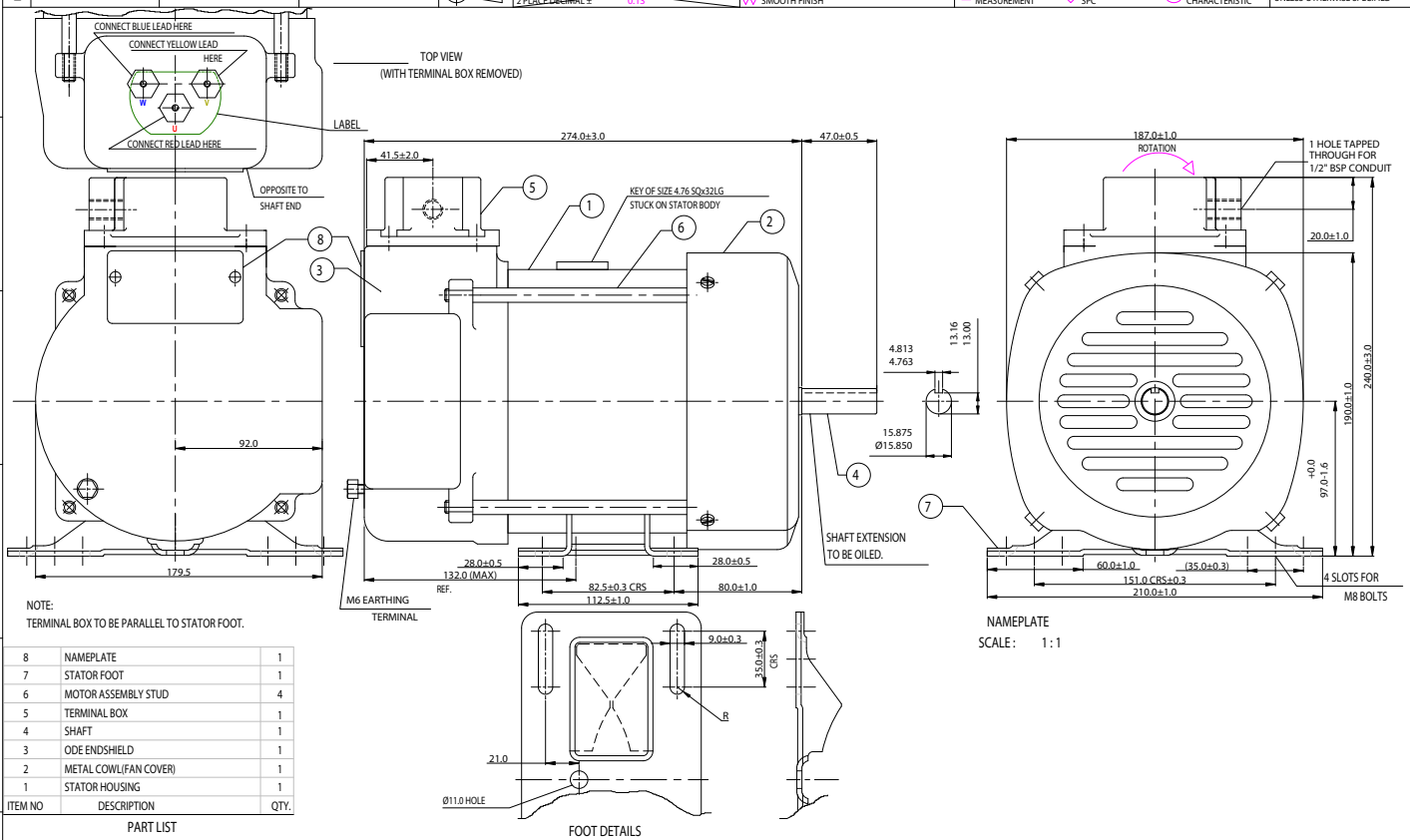

NOTE:
TERMINAL BOX TO BE PARALLEL TO STATOR FOOT.

NAMEPLATE
SCALE : 1 : 1

FOOT DETAILS

ITEM NO	DESCRIPTION	QTY.
8	NAMEPLATE	1
7	STATOR FOOT	1
6	MOTOR ASSEMBLY STUD	4
5	TERMINAL BOX	1
4	SHAFT	1
3	ODE ENDSHIELD	1
2	METAL COWL(FAN COVER)	1
1	STATOR HOUSING	1

PART LIST

R	DATE		R	DATE		R	DATE		R	DATE		R	DATE		R	DATE	
DRN	CHD	APPD	DRN	CHD	APPD	DRN	CHD	APPD	DRN	CHD	APPD	DRN	CHD	APPD	DRN	CHD	APPD
DICN No.			DICN No.			DICN No.			DICN No.			DICN No.			DICN No.		

DRN	R.Tipnis	26.2.03
CHK		
APPD		
SCALE	N.T.S.	
DATA STORAGE		
DICN No.	G /2003	

USED ON: FLAMEPROOF MOTOR

DIMENSION DRAWING
TERMINAL BOX
ON SIDE

Crompton Greaves

DRG NO: BKF274 REV: 0

CODE No.

JULY '2000

ISSUED TO :

CONTROL PLAN #

The information contained in this document is confidential and should not be used without prior consent of CROMPTON GREAVES LTD.